the ultimate bathing experience

carron

Alpha 1800

1800 x 800mm 220 litres

showerscreen compatible

available as a whirlpool

available in carronite

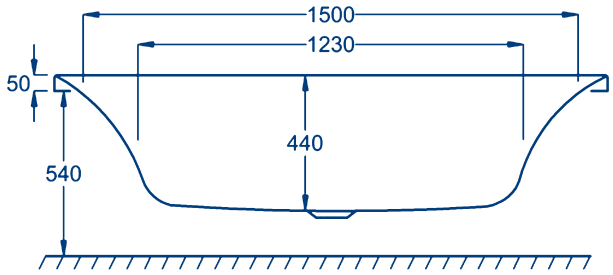

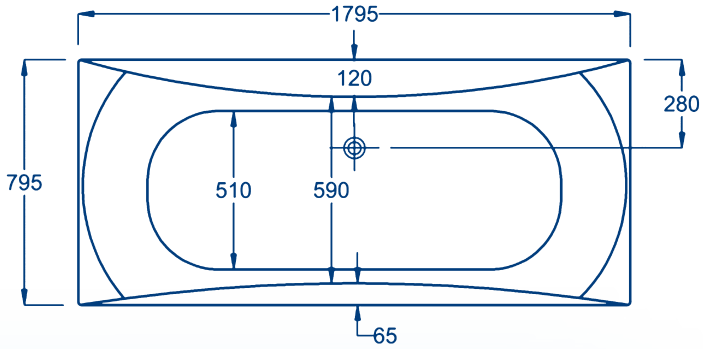

Carron Bathrooms Limited, North Carron Works, Stenhouse Road, Carron, Falkirk FK2 8UW
01324 638407 • info@carronbathrooms.com • www.carronbathrooms.com